0702-0133

2005-07 Dodge Dakota – Quad Cab

Components List:

2 – Stainless steel oval step bars
4 – Front/Center Bracket – Driver & Passenger Side
2 – Rear Bracket – Driver & Passenger Side
2 – Front Support Brace
2 – Rear Support Brace
2 – Spacer

Parts List:

4 – M12-1.75 x 110mm Hex Bolt
2 – M12-1.75 x 130mm Hex Bolt
6 – M12 Flat Washer
4 – M10-1.25 x 30mm Hex Head Bolts
8 – M10 Flat Washers
4 – M10 Lock Washers
4 – M10 Hex Nut
4 – M6 x 25 mm Self Drilling Bolt
12 – M10 button head bolt
12 – M10 lock washers
12 – M10 Flat washers

Installation Instructions:

1. Remove contents from box and check for damage. Verify all the parts from the list above are present and accounted for. Please read instructions completely before starting.

2. Remove existing body mount bolts as shown (see Fig. 1,3, 4).

3. Install front and rear passenger brackets using M12-1.75 x 110mm Hex Bolt (see Fig 1, 4). Install center passenger bracket using spacer with M12-1.75 x 130 mm hex bolt.

4. Install support brace to front & rear bracket as shown. Attach support brace to vehicle body using M6 self drilling bolt (see Fig. 2).

5. Place passenger side step bar on brackets. Each step bar is marked driver and passenger.

6. Assemble with M10 button head bolts and M10 washers. 2 bolts per bracket, 4 bolts per bar (see Fig 5).

7. Repeat installation for driver side.

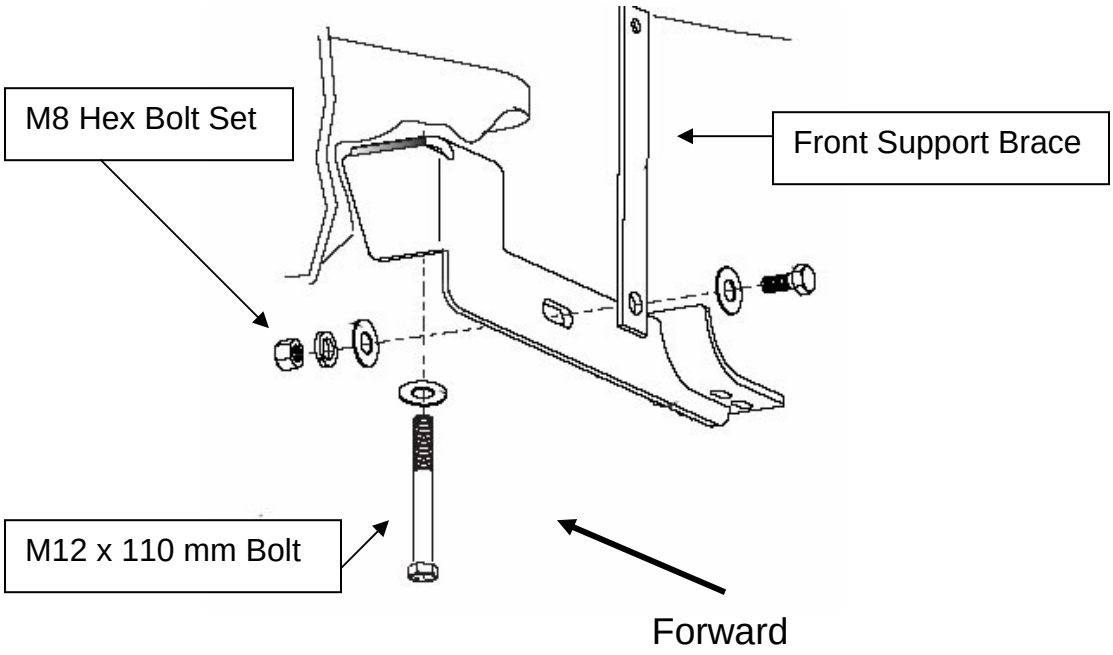

Figure 1. Passenger Side – Front Bracket

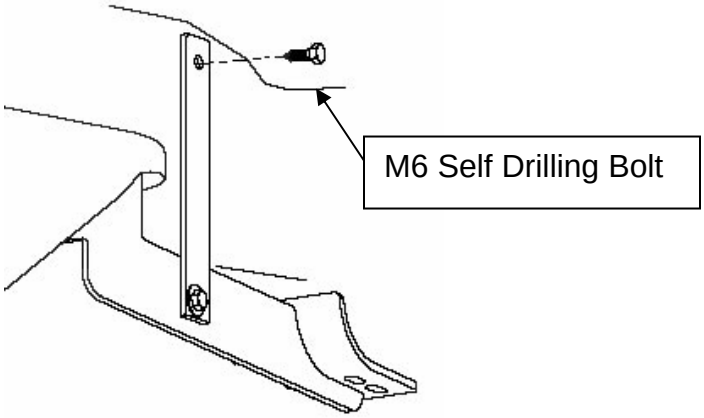

Figure 2. Passenger Side Support Brace

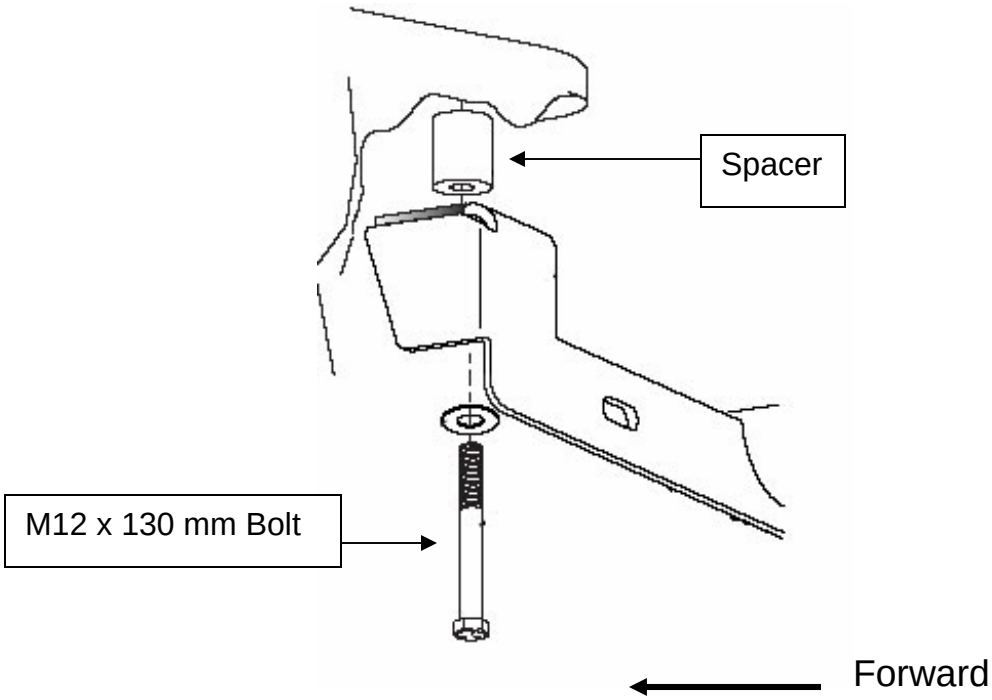

Figure 3. Passenger Side Center Bracket

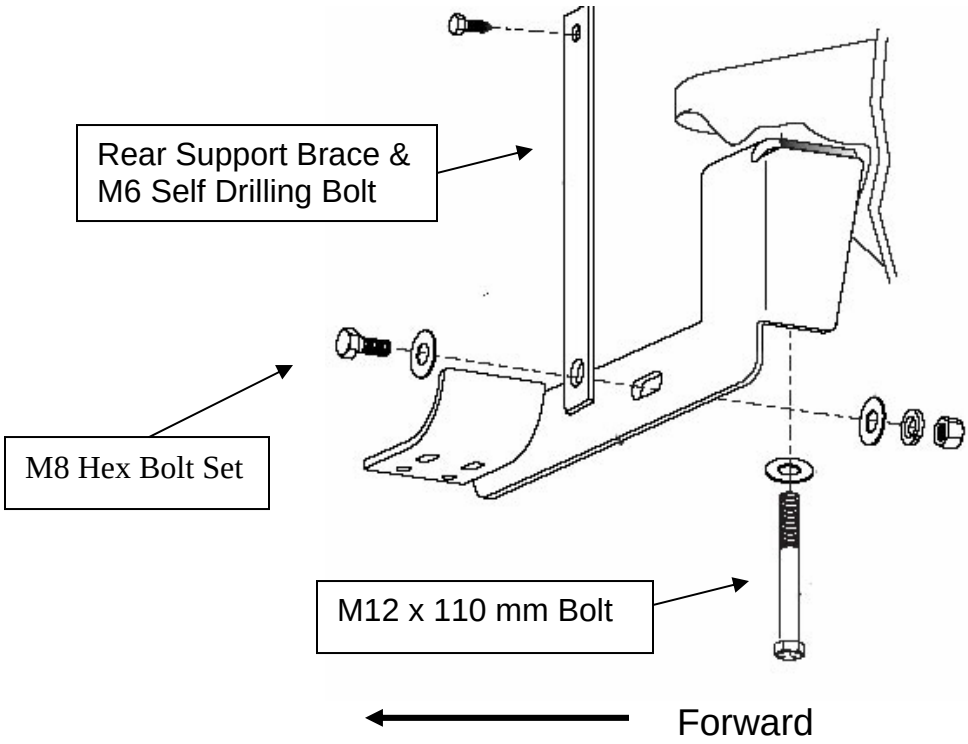

Figure 4. Passenger Side Rear Bracket

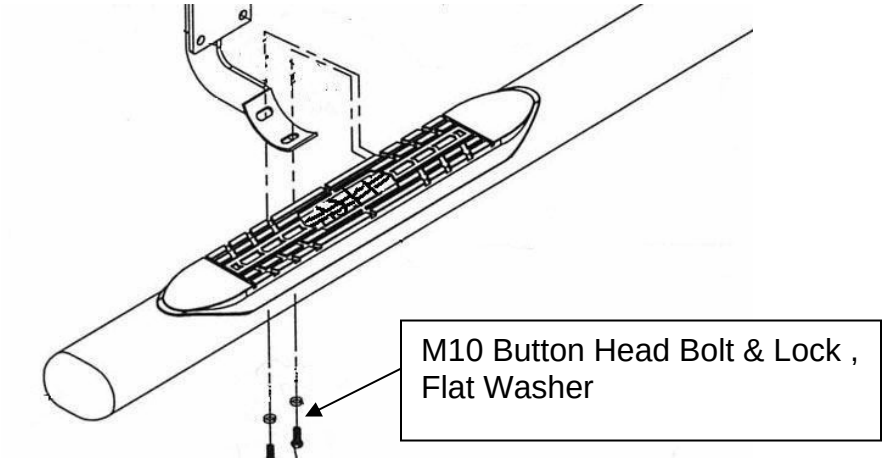

Figure 5. Installation View of Bracket & Bar